**ENGINE, TURBO BOOST VALVE - Z26S4D92AN/AH/BN/BH (C750286)**

**2026 RZR - RZR PRO S4 ULTIMATE (R01) - Z26S4D92AN/AH/BN/BH**

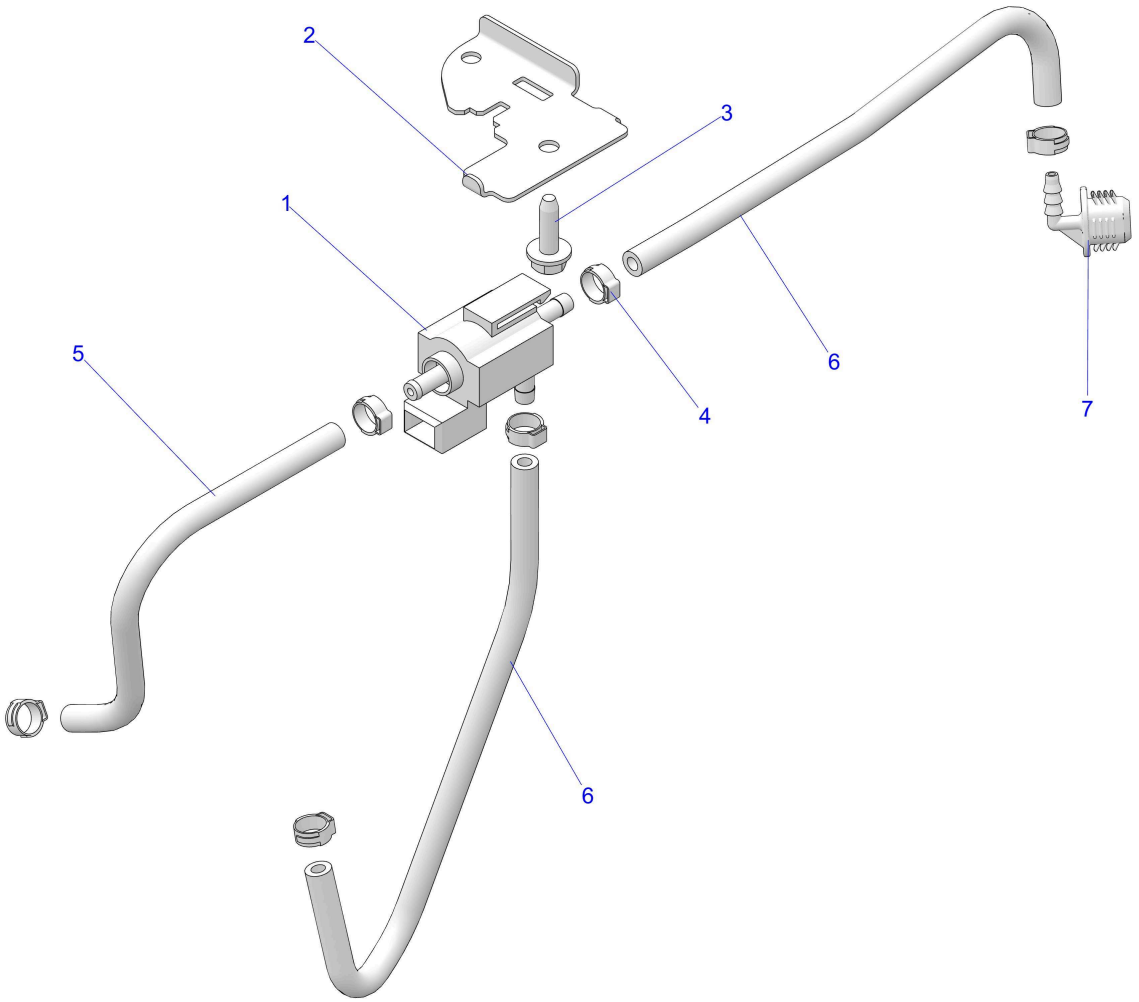


© 2023 Polaris Industries Inc.

C750286

| *Reference #* | *Part#* | *Description* | *Quantity* |
|---|---|---|---|
| 1 | 4011285 | VALVE,ELECTRONIC BOOST CONTROL | 1 |
| 2 | 5261420 | BRKT-BOOST CONTROLLER | 1 |
| 3 | 7518529 | SCR-M6X1.0X20,HXHD,FLG,TDFM,BK | 1 |
| 4 | 7082109 | CLAMP-OETIKER,16700005-10.0 | 6 |
| 5 | 8450153-20 | LINE-BOOST,3/16 ID,20 CM | 1 |
| 6 | 8450153-25 | LINE-BOOST,3/16 ID,25CM | 2 |
| 7 | 5454069 | FITTING-VENT LINE,90 | 1 |

Copyright 1996-2026 Polaris Industries U.S.A All rights reserved.